MOBA

FARMPACKER

MOPACK 55/70

Individual egg handling ensures high efficiency and perfect egg handling

Sensors control the supply of eggs accurately

The farmpacker designed for your profit

Mopack Farmpackers are designed for your profit. High performance machines with net capacities close to the theoretical maximum coupled with well built robust designs. Their low-maintenance technology with their hygienic and easy to clean construction makes these Farmpackers reliable and hard working companions for many years to come.

Concept: "The gentle touch"

A fundamental principle of Mopack is "individual egg handling". Many farmpacker concepts wait until there is one row of 6 eggs complete directly coming from an accumulator. Only then, the packer makes a movement, receives these eggs and in the same time places 6 previously fetched eggs in a tray. But when one egg is missing or in one channel there is not enough pressure to push this 6th egg forward, the other 5 eggs will have to wait and the whole farmpacker process stands idle. Not in Mopack. Eggs are accumulated and put on rollers independent of the packing process and if one egg is missing in the flow, it is only this single egg and thanks to the track (or carrousel) function, the rest of the process continues. The loss of efficiency is limited to fractions of a second. The result of this concept is a much better performance and a net production that is very close to the theoretical maximum capacity. There are hardly any reasons for stopping; the well known and reliable Moba denester ensures the correct handling of all known tray types.

Construction

The entire construction is easy to clean. The Mopack is made of stainless steel and contains Moba's famous synthetic parts for hygienic and gentle egg handling. All techniques produced by Moba's long time experience, are brought together in this machine. Sensitive parts are placed above the egg flow wherever possible. The conveyors are constructed in such way that accumulation of dirt and egg contents are limited to the absolute minimum.

Inkjet

Another strict advantage of the Mopack concept is the seamless integration possibility for continuous inkjet system. Since continuous inkjet systems are more suitable for rough industrial purposes than drop-on-demand systems, many customers look for a farmpacker where a single headed industrial no maintenance type can be fitted. Mopack offers the ideal basis for this.

Mopack is an ideal basis for continuous inkjet systems

Simple control

Control and operation

Since the controls are handled by a robust industrial system, simple on and off buttons do the job. The Mopack combines advanced technology with pure simplicity to a powerful result. Control to the supply conveyors from the chicken houses is equally simple. When an overload of eggs occur on the accumulators the pressure is measured by sensors. Subsequently a stop signal is sent to the control of supply conveyors. This happens even before too much pressure may result in hairline cracks.

Options

An optional 'Traystacker' turns the Mopack into a fully automatic system. The traystacker makes neat stacks of six trays, ready for loading on pallets or containers. This means considerable less work for human labour. An optional 'Traypalletiser' automatically places the stacks of six trays on pallets. The takeaway conveyors of the Mopack can be connected to both traystackers and traypalletisers. Curves and extensions can of course be applied according to your specifications.

MOBA

THE PARTNER FOR PROFIT

Specifications	MOPACK 55	MOPACK 70
	55 cases/ hour = 20.000 e.p.h.	70 cases/ hour = 25.000 e.p.h.
Voltage	200-230 Volt or 380-415 Volt, 3 phase + 0	200-230 Volt of 380-415 Volt, 3 phase + 0
Power Consumption	0,5 kVA (without traystacker)	
Dimensions	See drawing; total dimensions depending on configuration	

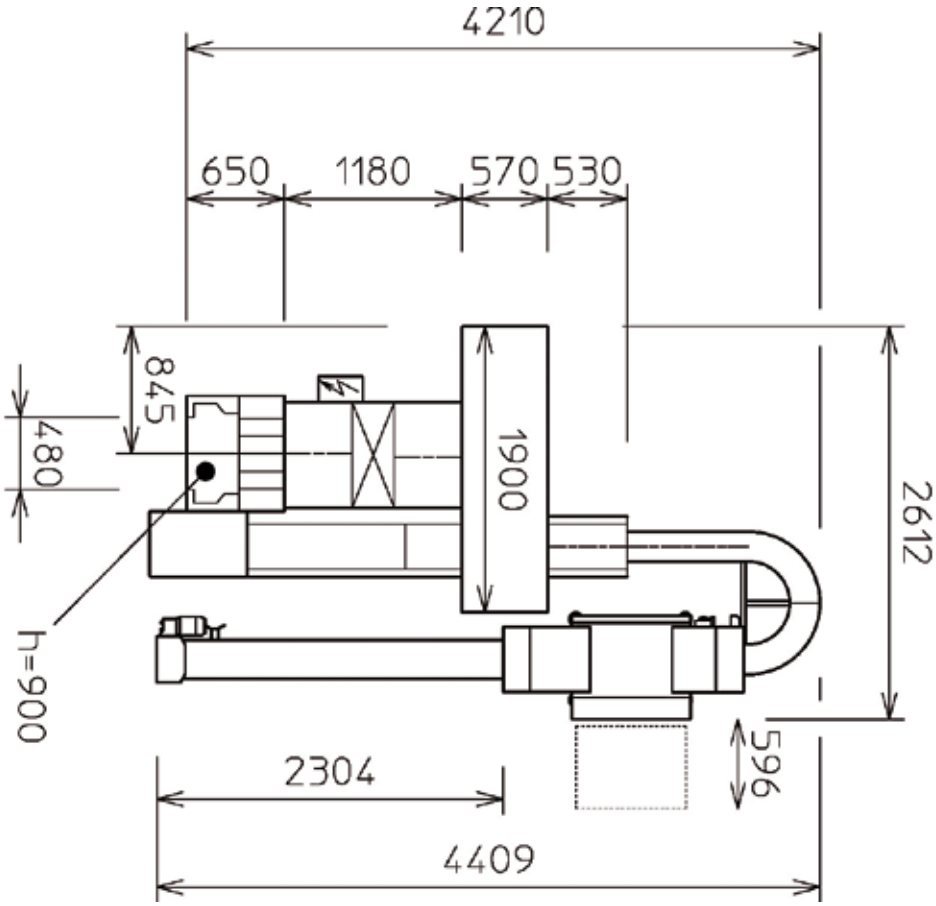

Moba B.V. (Headoffice)
P.O. Box 7, 3770 AA Barneveld • Stationsweg 117, The Netherlands • T: +31 (0) 342 455 655 • F: +31 (0) 342 455 634 • E: sales@moba.nl

For worldwide offices and agents' network, please look at www.moba.nl

Creation 09 | 2007 | 149-070069